A 10-10690-1

REVISIONS

NEW RELEASE PER ECN 16990.

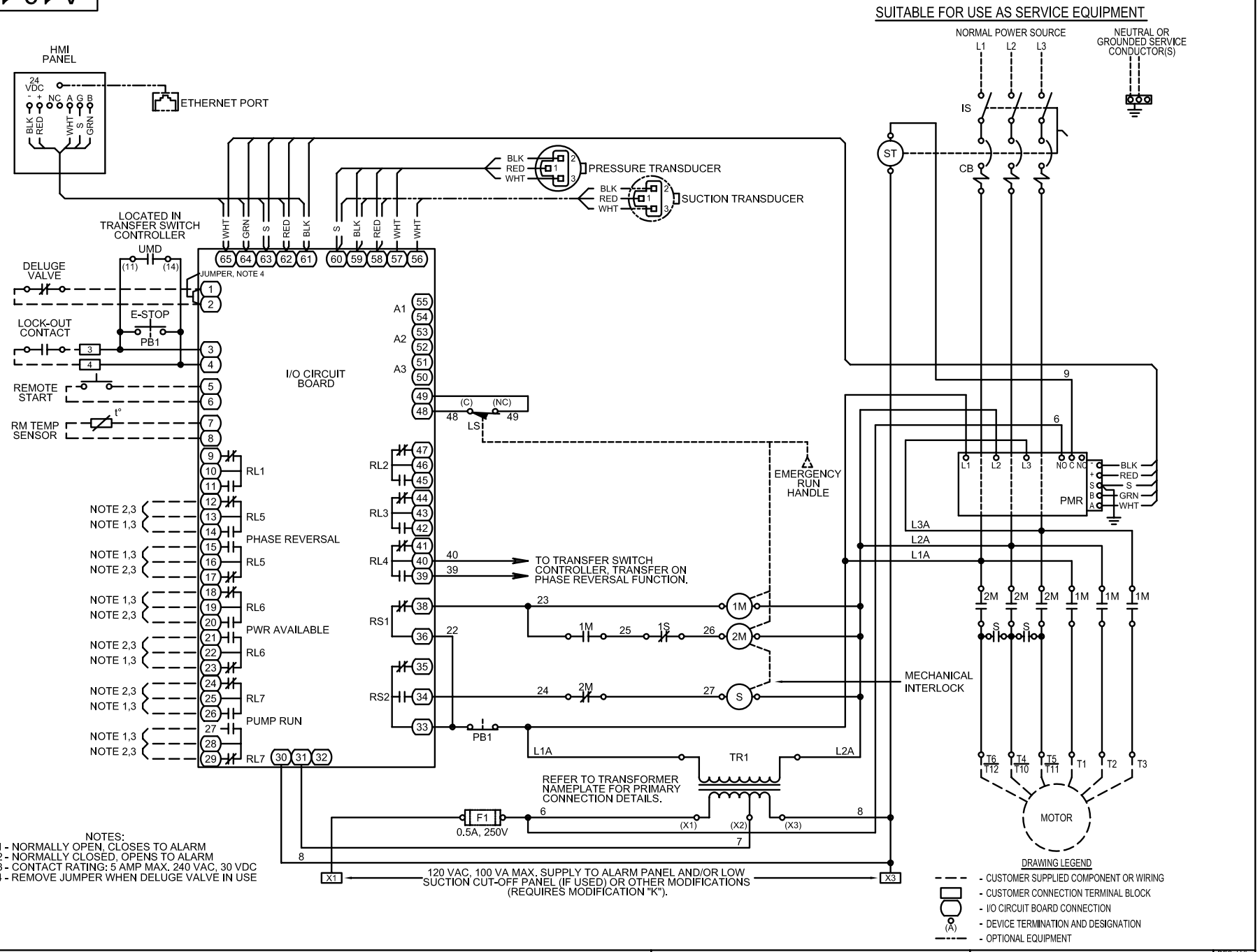

NOTES:
1 - NORMALLY OPEN, CLOSES TO ALARM
2 - NORMALLY CLOSED, OPENS TO ALARM
3 - CONTACT RATING: 5 AMP MAX. 240 VAC, 30 VDC
4 - REMOVE JUMPER WHEN DELUGE VALVE IN USE

TITLE BUL. 10690 FIRE PUMP CONTROLLERS, WYE DELTA OPEN TRANSITION STARTING

MADE BY SDC APP'D DJD DATE 04/29/08

JOSLYN CLARK CONTROLS, LLC
LANCASTER, SC USA 29720-8842

SCALE: 0.6 FILE: 10690-1-E

A 10-10690-1

SHEET 1 OF 1

DES. LVL. E REV.